IOWA DEPARTMENT OF NATURAL RESOURCES

# CONSTRUCTION DOCUMENTS FOR BENNINGTON RAMP/RIDGE BRIDGE ROAD MAINTENANCE

## MARION COUNTY, IOWA

DOT PROJECT #SP-00SP(3)--7C-00

DNR PROJECT #20-05-63-01

LICENSED PROFESSIONAL ENGINEER
BRUCE L. FLIPPIN
19513
IOWA

I HEREBY CERTIFY THAT THIS ENGINEERING DOCUMENT WAS PREPARED UNDER MY SUPERVISION AND THAT ENGINEERING DECISIONS WITH REGARD TO THE DESIGN WERE MADE BY ME UNDER THE LAWS OF THE STATE OF IOWA.

Bruce L. Flippin

Digitally signed by Bruce L. Flippin
DN: C=US, E=bruce.flippin@dnr.iowa.gov, O=Iowa DNR, OU=Land and Waters Bureau, CN=Bruce L. Flippin
Reason: I am the author of this document
Date: 2020.11.12 12:07:00-06'00'

SIGNATURE: DATE:

BRUCE L. FLIPPIN
PRINTED OR TYPED NAME

MY LICENCE RENEWAL DATE IS DECEMBER 31, 2020

PAGES COVERED BY THIS SEAL: All

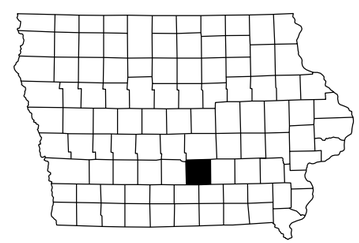

IOWA ONE CALL
1-800-292-8989
www.iowaonecall.com
811 Know what's below. Call before you dig.

### DIRECTORY

| PROJECT MANAGER | | CONSTRUCTION INSPECTOR | |
|---|---|---|---|
| COMPANY | IOWA DEPARTMENT OF NATURAL RESOURCES | COMPANY | IOWA DEPARTMENT OF NATURAL RESOURCES |
| ADDRESS | 502 EAST 9TH STREET | ADDRESS | |
| CITY,STATE,ZIP | DES MOINES, IA, 50319 | CITY,STATE,ZIP | |
| CONTACT | BRUCE L. FLIPPIN | CONTACT | JASON KRUSE |
| TELEPHONE | 515-689-8009 | TELEPHONE | 515-250-3707 |
| FAX | 515-281-8685 | FAX | |
| EMAIL | bruce.flippin@dnr.iowa.gov | EMAIL | jason.kruse@dnr.iowa.gov |

### PROJECT DESCRIPTION

This project consists of granular roadway maintenance - ditch cleaning, channel excavation, culvert removal/installation, blading/shaping of roadway, spreading new rock and the installation of revetment and erosion stone.

### AUTHORIZATION TO BID

Karen Kinkead — Digitally signed by Karen Kinkead Date: 2020.11.12 12:18:44 -06'00'

AUTHORIZATION - PARKS | WILDLIFE | FISHERIES | LAW ENFORCEMENT | FORESTRY DATE

Travis Bahr — 11/12/2020

ENGINEERING BUREAU CHIEF — DATE

### SHEET INDEX


| | |
|---|---|
| A.01 | COVER SHEET |
| A.02 | LOCATION MAP |
| A.03 | LOCATION MAP |
| B.01 | TYPICAL CROSS SECTIONS AND DETAILS |
| B.02 | TYPICAL CROSS SECTIONS AND DETAILS |
| B.03 | TYPICAL CROSS SECTIONS AND DETAILS |
| B.04 | TYPICAL CROSS SECTIONS AND DETAILS |
| B.05 | TYPICAL CROSS SECTIONS AND DETAILS |
| B.06 | TYPICAL CROSS SECTIONS AND DETAILS |
| B.07 | TYPICAL CROSS SECTIONS AND DETAILS |
| B.08 | TYPICAL CROSS SECTIONS AND DETAILS |
| B.09 | TYPICAL CROSS SECTIONS AND DETAILS |
| C.01 | QUANTITIES AND GENERAL INFORMATION |
| D.01 | SITE PLAN |
| D.02 | SITE PLAN |
| D.03 | SITE PLAN |
| D.04 | SITE PLAN |
| D.05 | SITE PLAN |
| D.06 | SITE PLAN |


CONSULTANT:


IOWA DEPARTMENT OF NATURAL RESOURCES
ENGINEERING SERVICES - WALLACE BUILDING
502 E. 9TH ST., DES MOINES, IA 50319-0034


COVER SHEET

ROAD MAINTENANCE FOR:
BENNINGTON RAMP/RIDGE BRIDGE
MARION COUNTY

| NO. | BY / DATE | REVISION |
|---|---|---|

DRAWN BY: BLF
PROJECT NUMBER: 20-05-63-01
CHK'D BY:
DATE: OCT 2020

SHEET No: A.01

# Red Rock Wildlife Management Area - EC

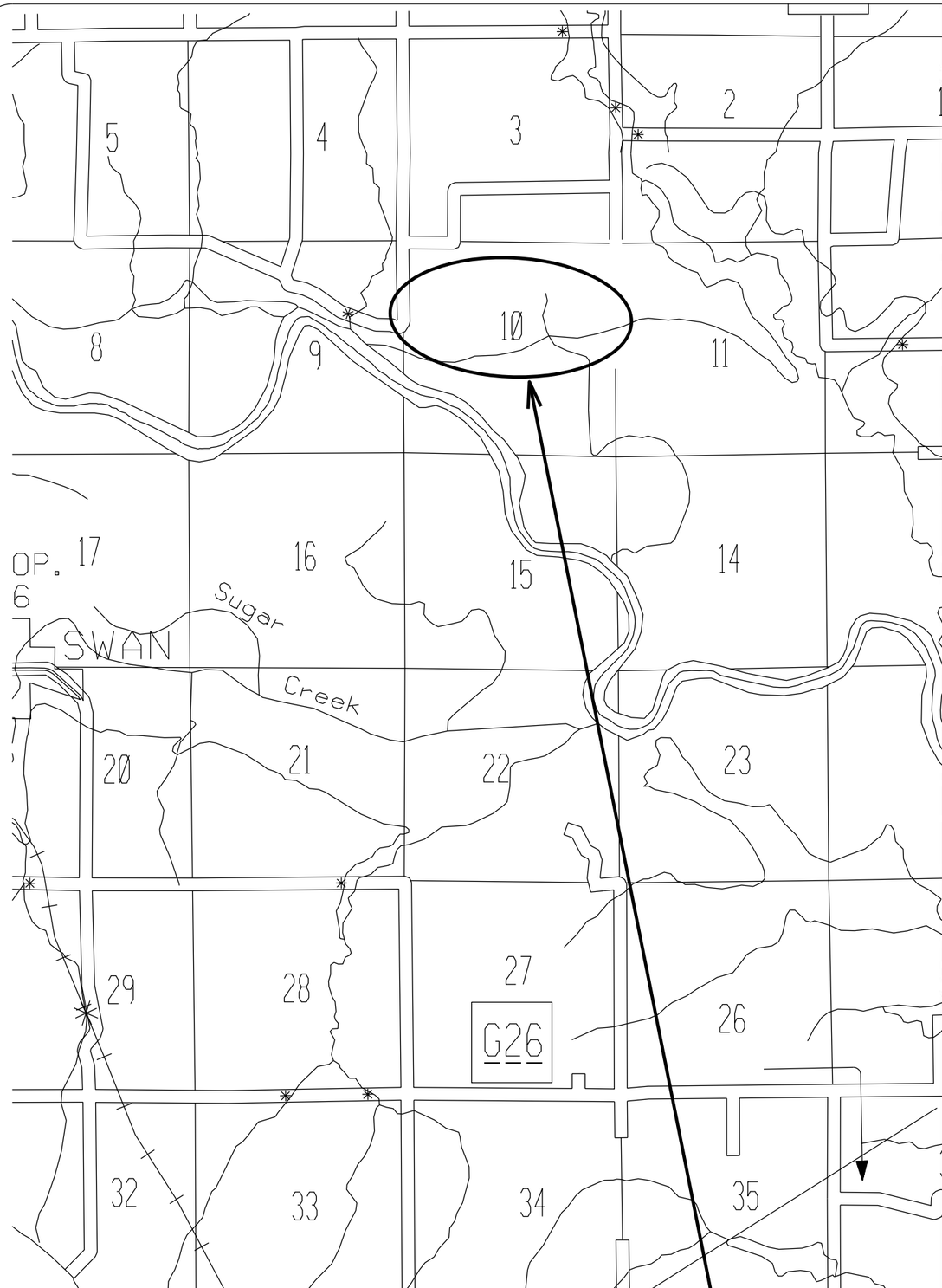


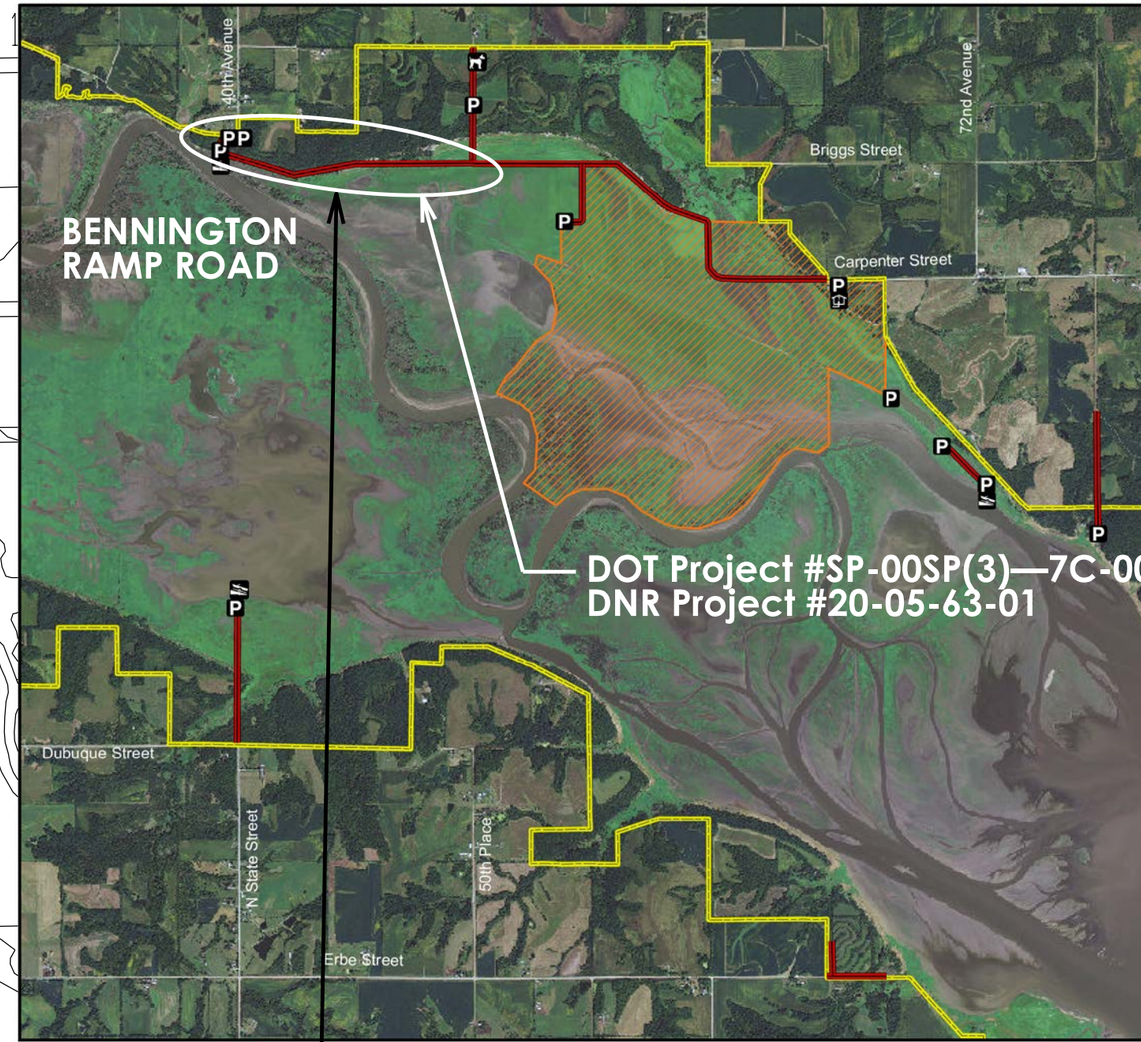


**Legend**

State Areas open to hunting

- WMA Boundary
- Refuge
- Boat Ramp
- Unit Headquarters
- Parking Lot
- Access Road

2011 Aerial Photography

*Map Creation Date: 9/2014*

N

Miles 0 0.25 0.5

Acres: 31,123

Habitat: 1/4 Marsh & Lake, 1/4 Timber, 1/2 Upland

Species: Deer, Squirrel, Pheasant, Waterfowl, Dove

Contact: Todd Gosselink
Red Rock Wildlife Unit
515-238-6936

Jasper, Marion,
Polk & Warren Counties, Iowa

*Directions: N Access - 3.5 miles S of Monroe on Hwy 14, 7 miles W on Carpenter St. S Access - 4 miles N of Pleasantville on 40th Ave.*

CONSULTANT:

**IOWA DEPARTMENT OF NATURAL RESOURCES**

ENGINEERING SERVICES - WALLACE BUILDING
502 E. 9TH ST., DES MOINES, IA 50319-0034

PROJECT LOCATION MAP

ROAD MAINTENANCE FOR:

BENNINGTON RAMP/RIDGE BRIDGE

MARION COUNTY

| NO. | BY / DATE | REVISION |
|---|---|---|

| | |
|---|---|
| DRAWN BY: BLF | PROJECT NUMBER: 20-05-63-01 |
| CHK'D BY: | DATE: OCT 2020 |

SHEET No: **A.02**

# Red Rock Wildlife Management Area - SE

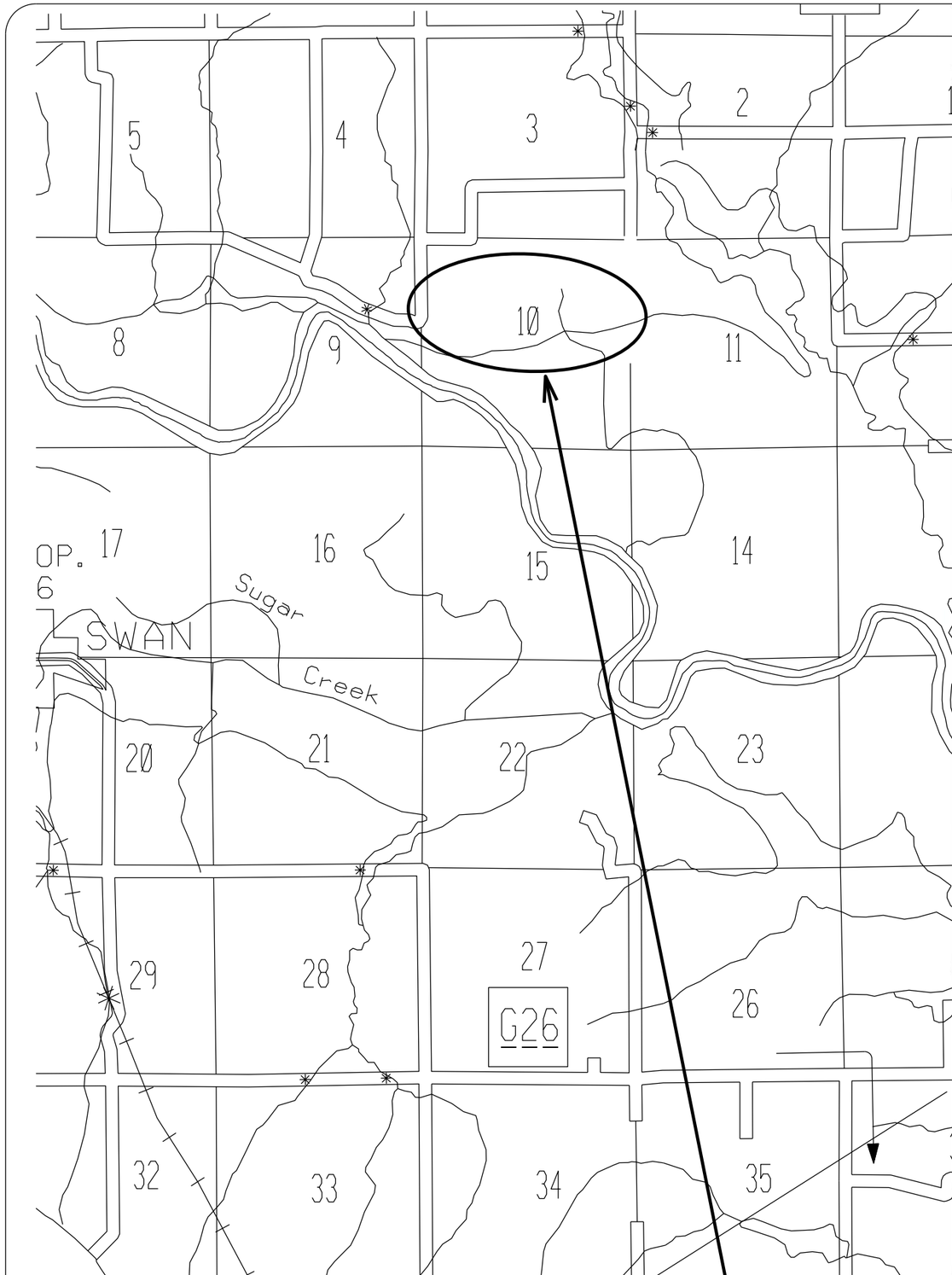


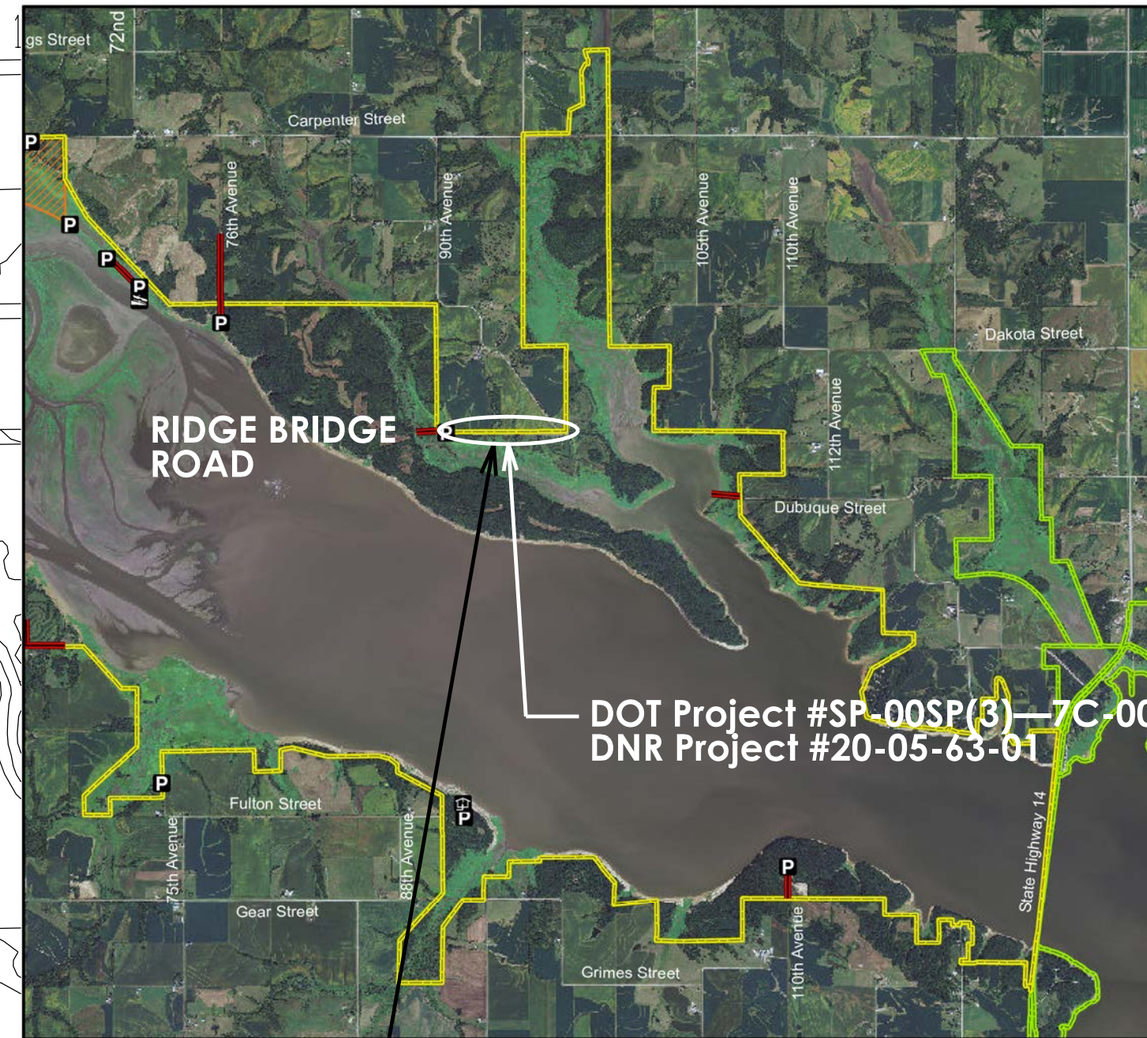


**Legend**

State Areas open to hunting

- WMA Boundary
- Unit Headquarters
- Parking Lot
- Boat Ramp
- Access Road
- Other Public Land

2011 Aerial Photography

*Map Creation Date: 9/2014*

N

Miles 0 0.5 1

Acres: 31,123

Habitat: 1/4 Marsh & Lake, 1/4 Timber, 1/2 Upland

Species: Deer, Squirrel, Pheasant, Waterfowl, Dove

Contact: Todd Gosselink
Red Rock Wildlife Unit
515-238-6936

Jasper, Marion, Polk & Warren Counties, Iowa

*Directions: N Access - 3.5 miles S of Monroe on Hwy 14, 7 miles W on Carpenter St. S Access - 4 miles N of Pleasantville on 40th Ave.*

PROJECT LOCATION

CONSULTANT:

**IOWA DEPARTMENT OF NATURAL RESOURCES**

ENGINEERING SERVICES - WALLACE BUILDING
502 E. 9TH ST., DES MOINES, IA 50319-0034

PROJECT LOCATION MAP

ROAD MAINTENANCE FOR:

BENNINGTON RAMP/RIDGE BRIDGE

MARION COUNTY

| NO. | BY | DATE | REVISION |
|---|---|---|---|

DRAWN BY: BLF
PROJECT NUMBER: 20-05-63-01
CHK'D BY:
DATE: OCT 2020
SHEET No: A.03

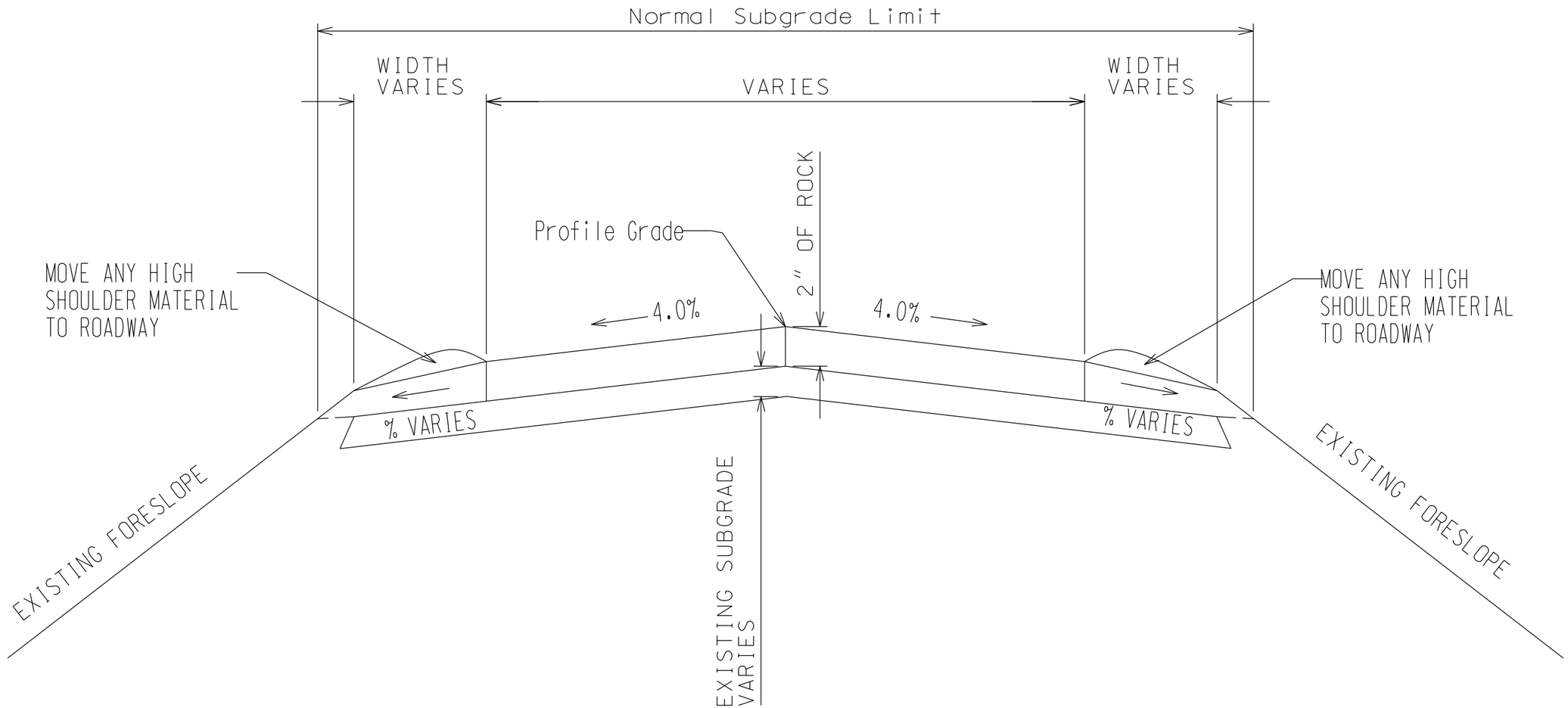


# Typical Roadway Section - Center Crown

Note:

Normal sections shown may be appropriately modified for areas specifically designated by the Engineer.

| STATION | TO STATION | LOCATION | WIDTH |
|---|---|---|---|
| 0+00 | 40+00 | BEARDSLEY DR | 12' |
| 40+00 | 61+69 | HEADING EAST | 12' |
| | | | |

CONSULTANT:

IOWA DEPARTMENT OF NATURAL RESOURCES

ENGINEERING SERVICES - WALLACE BUILDING
502 E. 9TH ST., DES MOINES, IA 50319-0034

TYPICAL CROSS SECTIONS AND DETAILS

ROAD MAINTENANCE FOR:
BENNINGTON RAMP/RIDGE BRIDGE
MARION COUNTY

| NO. | BY / DATE | REVISION |
|---|---|---|
| | | |

DRAWN BY: BLF
PROJECT NUMBER: 20-05-63-01
CHK'D BY:
DATE: OCT 2020
SHEET No: B.01

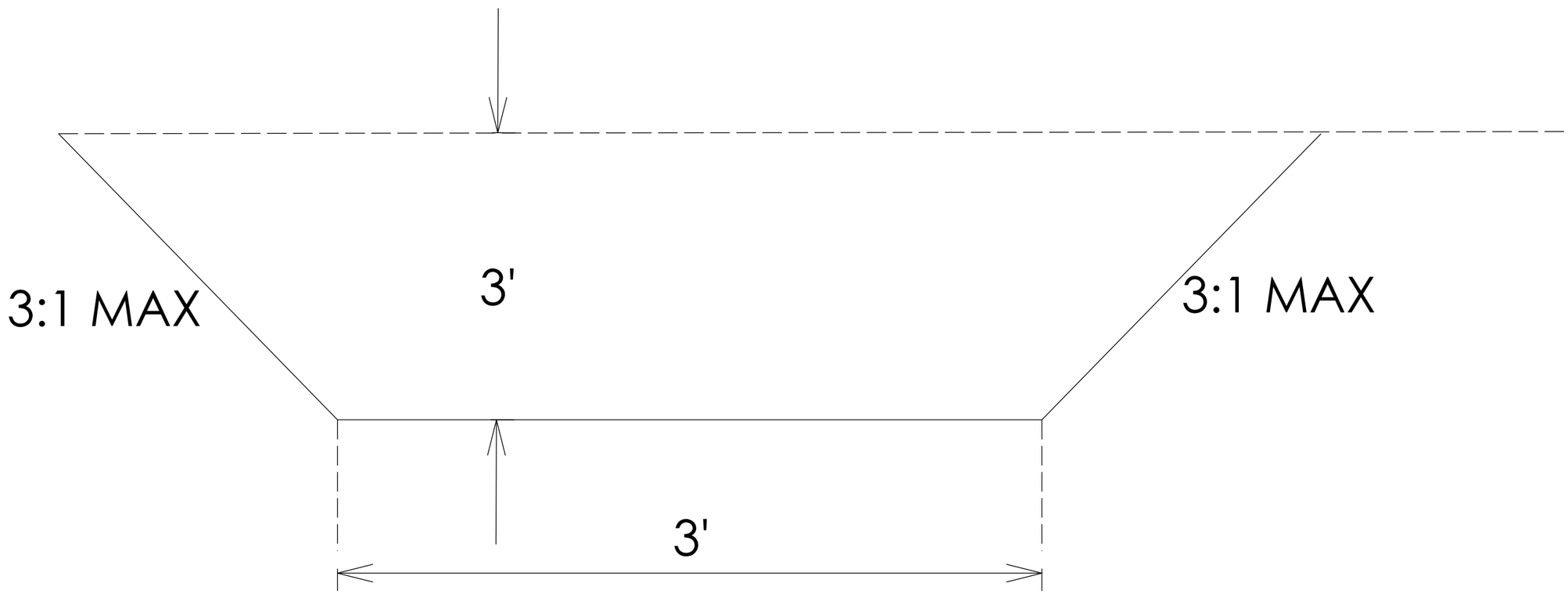


TYPICAL DITCH CROSS SECTION

CONSULTANT:

**IOWA DEPARTMENT OF NATURAL RESOURCES**

ENGINEERING SERVICES - WALLACE BUILING
502 E. 9TH ST., DES MOINES, IA 50319-0034

TYPICAL CROSS SECTIONS AND DETAILS

ROAD MAINTENANCE FOR:

BENNINGTON RAMP/RIDGE BRIDGE

MARION COUNTY

| NO. | BY / DATE | REVISION |
|---|---|---|

DRAWN BY: BLF

PROJECT NUMBER: 20-05-63-01

CHK'D BY:

DATE: OCT 2020

SHEET No: **B.02**

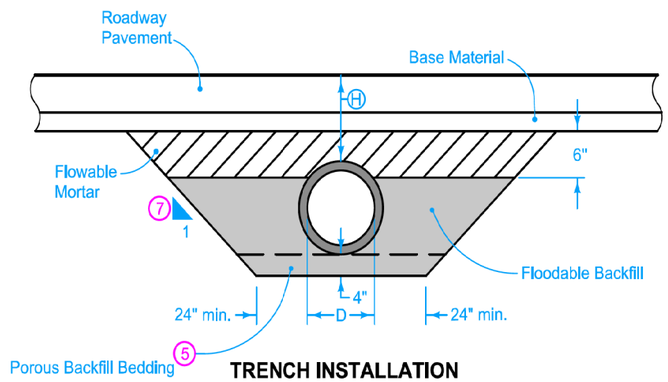


**TRENCH INSTALLATION**
**H ≤ 4'**

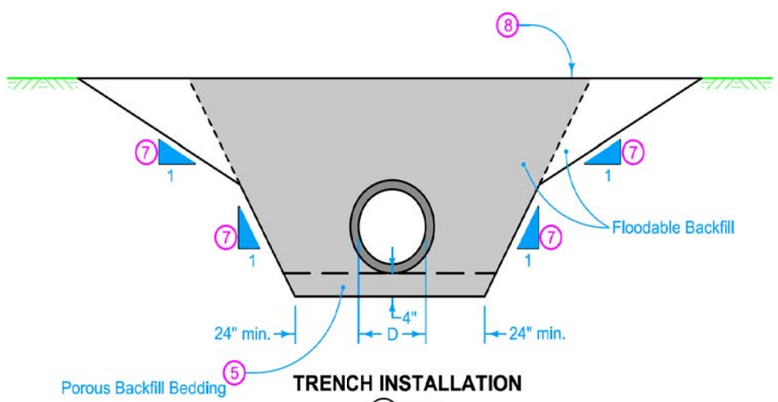


**TRENCH INSTALLATION**
**H > 4'**

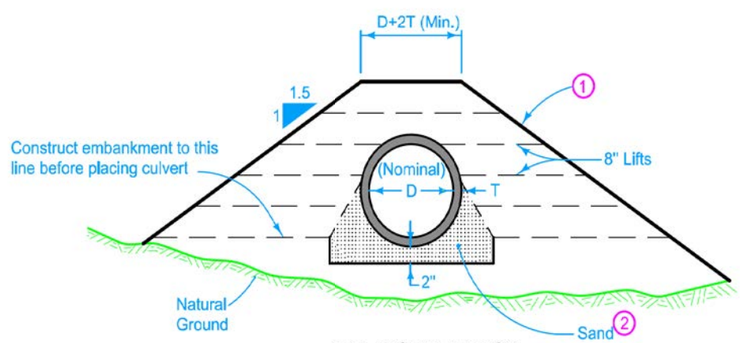


**FILL INSTALLATION**
**(FOR RIGID PIPES ONLY)**

**CLASS 'B' BEDDING & BACKFILL** 4

Denotes pay limits for flooded backfill

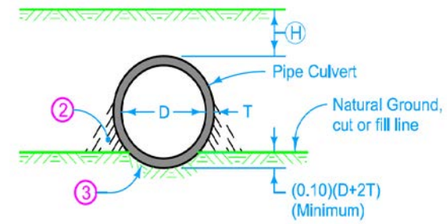


**CLASS 'C' BEDDING & BACKFILL**

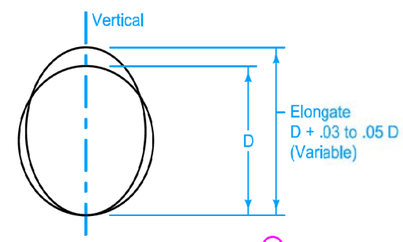


**ELONGATED PIPE** 9

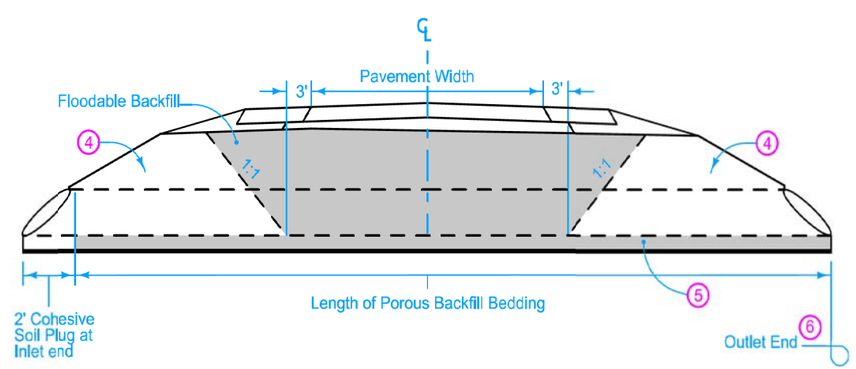


**TYPICAL SECTION - SOIL PLUG**

Refer to DR-104 for minimum and maximum allowable cover (H) for the particular kind of pipe culvert.

1. The backfill adjacent to and above the pipe culvert may be placed in conjunction with normal embankment construction. Thoroughly tamp the embankment within the limits shown.
2. Take extra care to ensure complete and satisfactory tamping of backfill material in the area immediately adjacent to the lower portion of pipe.
3. Carefully shape excavation below groundline either using a template conforming to actual dimension and shape of the pipe or using other means. If using other means, check with a template conforming to the actual dimension and shape of the pipe.
4. For culverts backfilled by flooding, place a cohesive soil plug at the inlet, outlet, and, when necessary, sides, prior to flooding.
5. 4-inch Porous Backfill bedding. 2-inch Floodable Backfill bedding may be used under unsealed rigid pipe.
6. Extend Porous Backfill through the outlet end soil plug when used for bedding.
7. Quantity calculations are based upon a 1:1 slope and minimum trench dimension. Actual slope of trench may vary based upon Contractor's operations.
8. Ground Line at time of pipe installation. When existing ground exceeds 5 feet depth over pipe, backfill and compaction by flooding is not required more than 5 feet above the pipe.
9. Where a corrugated metal pipe culvert requiring elongation is to be installed (to counteract deformation caused by backfill), complete elongation using a means approved by the Engineer. Elongation may be developed either as part of shop fabrication or field installation. Install with elongated axis vertical.

Possible Contract Items:
- Flowable Mortar
- Flooded Backfill
- Excavation, Class 20

Possible Tabulations:
- 104-3
- 104-4

IOWA DOT

**STANDARD ROAD PLAN**

| REVISION | |
|---|---|
| 2 | 04-18-17 |

**DR-101**

SHEET 1 of 1

REVISIONS: Changed "Porous Backfill" to "Porous Backfill Bedding" for clarity. Modified trench installation detail for H>4' to clarify pay limits.

Brian Smith
APPROVED BY DESIGN METHODS ENGINEER

**PIPE CULVERT**
**(BEDDING AND BACKFILL)**

CONSULTANT:

IOWA DEPARTMENT OF NATURAL RESOURCES
ENGINEERING SERVICES - WALLACE BUILDING
502 E. 9TH ST., DES MOINES, IA 50319-0034

TYPICAL CROSS SECTIONS AND DETAILS

ROAD MAINTENANCE FOR:
BENNINGTON RAMP/RIDGE BRIDGE
MARION COUNTY

| NO. | BY / DATE | REVISION |
|---|---|---|

| DRAWN BY: | PROJECT NUMBER: |
|---|---|
| BLF | 20-05-63-01 |
| CHK'D BY: | DATE: |
| | OCT 2020 |

SHEET No:
**B.03**

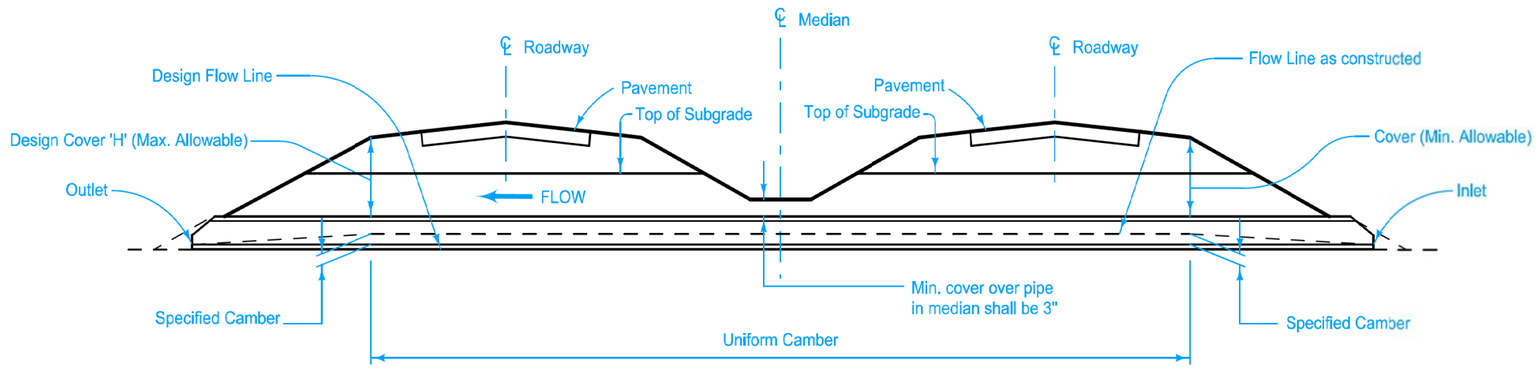


**TYPICAL INSTALLATION DUAL ROADWAY**

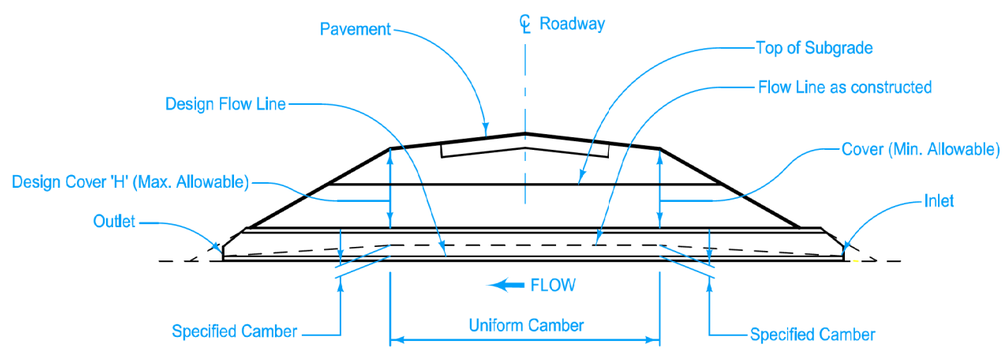


**TYPICAL INSTALLATION SINGLE ROADWAY**

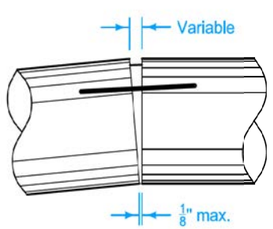


**TYPICAL JOINT IN CAMBERED PIPE** (1)

| Design Cover 'H' (feet) | Normal Camber (feet) |
|---|---|
| 5 | 0.08 |
| 10 | 0.17 |
| 15 | 0.25 |
| 20 | 0.33 |
| 25 | 0.42 |
| 30 | 0.50 |
| 35 | 0.58 |

| Pipe Size 'D' | Maximum Camber (feet) |
|---|---|
| 24" | 1.1 |
| 30" | 1.2 |
| 36" | 1.3 |
| 42" | 1.4 |
| 48" | 1.5 |
| 60" | 1.6 |
| 84" | 1.7 |

**ALLOWABLE CAMBER TABLES**

Refer to DR-121 for pipe joint connection and wrapping.

Refer to DR-101 for culvert bedding and backfill.

COVER

Refer to DR-104 for minimum and maximum allowable cover for the particular kind of culvert.

CAMBER

Camber is the dimension line between inlet and outlet elevation. Some settlement of the structure is usually anticipated, resulting in the design flow line between inlet and outlet. Camber is developed uniformly from inlet and outlet to a point beneath the outside shoulder lines of the roadway and is uniform between those points, as indicated. The Normal Camber indicated in the "Allowable Camber Tables" should be used unless specific camber values are indicated elsewhere in the plans.

(1) Camber for concrete pipe is created by placing pipe sections tight at the bottom of the joint with variable opening at top of joint. Camber for corrugated metal pipe to be done as directed by the Engineer.

IOWA DOT

STANDARD ROAD PLAN

REVISION: New 04-21-15

DR-102

SHEET 1 of 1

REVISIONS: New. Replaces RF-30B.

Brian Smith

APPROVED BY DESIGN METHODS ENGINEER

**PIPE CULVERT (COVER AND CAMBER)**

CONSULTANT:

IOWA DEPARTMENT OF NATURAL RESOURCES

ENGINEERING SERVICES - WALLACE BUILDING
502 E. 9TH ST., DES MOINES, IA 50319-0034

TYPICAL CROSS SECTIONS AND DETAILS

ROAD MAINTENANCE FOR:

BENNINGTON RAMP/RIDGE BRIDGE

MARION COUNTY

| NO. | BY / DATE | REVISION |
|---|---|---|

DRAWN BY: BLF

PROJECT NUMBER: 20-05-63-01

CHK'D BY:

DATE: OCT 2020

SHEET No: B.04

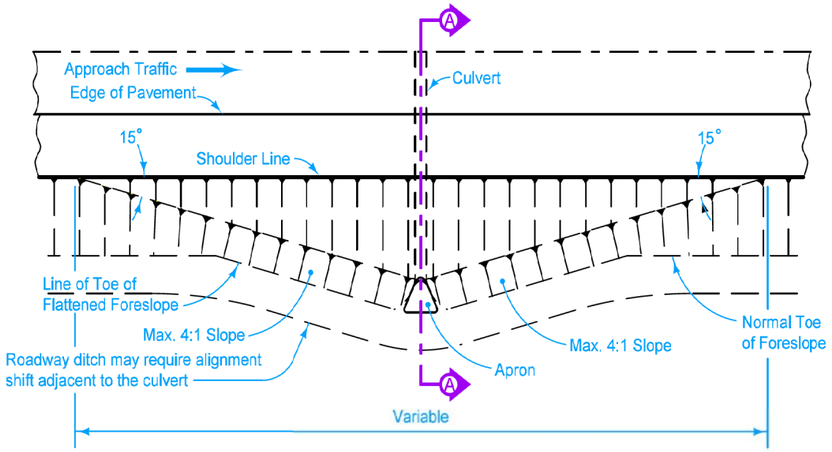


TYPICAL INSTALLATION PLAN
WHERE SPECIAL BERM IS REQUIRED

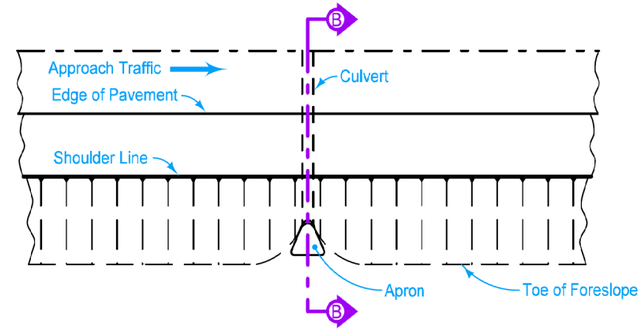


TYPICAL INSTALLATION PLAN
WHERE CULVERT MATCHES NORMAL FORESLOPE

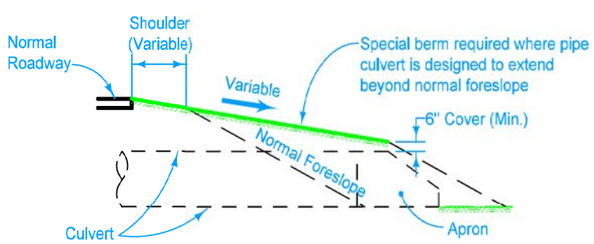


SECTION A-A

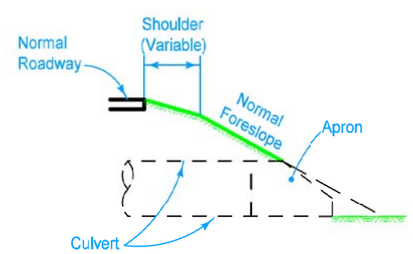


SECTION B-B

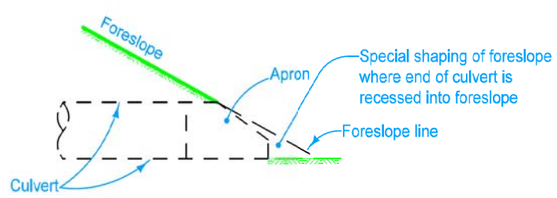


DETAIL OF SHAPING EARTH FORESLOPE
AT CULVERT END

IOWA DOT

STANDARD ROAD PLAN

| REVISION | |
|---|---|
| New | 04-21-15 |

DR-103

SHEET 1 of 1

REVISIONS: New. Replaces RF-30C.

Brian Smith
APPROVED BY DESIGN METHODS ENGINEER

PIPE CULVERT
(INSTALLATION DETAILS)

CONSULTANT:

IOWA DEPARTMENT OF NATURAL RESOURCES

ENGINEERING SERVICES - WALLACE BUILDING
502 E. 9TH ST., DES MOINES, IA 50319-0034

TYPICAL CROSS SECTIONS AND DETAILS

ROAD MAINTENANCE FOR:
BENNINGTON RAMP/RIDGE BRIDGE
MARION COUNTY

| NO. | BY / DATE | REVISION |
|---|---|---|

DRAWN BY: BLF
PROJECT NUMBER: 20-05-63-01
CHK'D BY:
DATE: OCT 2020
SHEET No: B.05

| CONCRETE CULVERT PIPE<br>CLASS "B" BEDDING | | | | |
|---|---|---|---|---|
| DIAMETER OF PIPE 'D' Inches | ( H ) MAXIMUM ALLOWABLE COVER IN FEET | | | |
| | 1500D (Class II) | 2000D (Class III) | 3000D (Class IV) | 3750D (Class V) |
| 18 | 11 | 13 | 20 | 25 |
| 24 | 12 | 14 | 21 | 26 |
| 36 | 13 | 16 | 23 | 28 |
| 48 | 14 | 16 | 24 | 29 |
| 60 | 14 | 17 | 24 | 29 |
| 72 | 14 | 17 | 24 | 30 |
| 84 | 15 | 17 | 25 | 30 |
| 96 | 15 | 18 | 25 | 31 |
| 108 | 15 | 18 | 26 | 32 |

| CONCRETE CULVERT PIPE<br>CLASS "C" BEDDING | | | | |
|---|---|---|---|---|
| DIAMETER OF PIPE 'D' Inches | ( H ) MAXIMUM ALLOWABLE COVER IN FEET | | | |
| | 1500D (Class II) | 2000D (Class III) | 3000D (Class IV) | 3750D (Class V) |
| 18 | 9 | 12 | 18 | 22 |
| 24 | 10 | 13 | 19 | 23 |
| 36 | 11 | 14 | 20 | 24 |
| 48 | 11 | 15 | 21 | 25 |
| 60 | 12 | 15 | 21 | 26 |
| 72 | 12 | 16 | 22 | 26 |
| 84 | 13 | 16 | 22 | 27 |
| 96 | 13 | 16 | 23 | 27 |
| 108 | 13 | 17 | 23 | 28 |

CONCRETE CULVERT PIPE

DESIGN CRITERIA FOR CONCRETE PIPE

The height of cover tables have been prepared from data in the "Concrete Pipe Design Manual" published by the American Concrete Pipe Association using the values listed below.

FOR EMBANKMENT CONDITIONS

Fill Material Density = w = 120 lbs. per cu. ft.
Settlement Ratio = rsd = +0.5
* = ku = 0.13
Projection Ratio = p = 0.9 (Class "C" bedding)
= p = 0.7 (Class "B" bedding)
Factor of Safety = F.S. = 1.33 on Ultimate Strength

* Using a ratio of lateral to vertical earth pressure (k) of 0.37 (saturated yellow clay) and a coefficient of internal friction (u) of 0.34.

The values shown for concrete pipe were calculated for concrete pipe placed under embankment conditions. These values do not apply to to design and installation of sanitary sewer except where sanitary sewer would be placed under embankment conditions.

When unclassified pipe is specified, furnish and install a class of pipe meeting the requirements on the chart.

For Steel Round Pipe, the Contractor may choose the type of corrugated pipe and installation to furnish as long as the selection conforms to the limits indicated for the type specified.

When furnishing Steel Arch Pipe, furnish pipe with corrugations as specified in plans.

Minimum allowable cover for concrete and metal pipe is 2 feet for roadway culverts and 1 foot for entrance culverts.

Maximum cover for all sizes and installations of concrete arch pipe is 12 feet.

For all sizes and installations of polyethylene pipe:
minimum cover = 2 feet
maximum cover = 24 feet for 12 to 24 inch pipes
20 feet for 30 to 48 inch pipes

Where a pipe size not listed in the table is required, the 'H' indicated for the next smaller size will apply.

Special installations may be designed to exceed indicated maximumallowable cover by specific modification of one or more of the following conditions:

1. Bedding Class
2. Pipe Strength (including special design pipe)
3. Type of backfill or cover material
4. Compaction requirements for backfill or cover material
5. Controlled trench width

Where site conditions favor such modifications, significant economy may result from special design installations and these should be considered. Special designs will specify particular modification of construction requirements or design criteria as applicable. Necessary modifications of normal requirements will not ordinarily be paid for seperately but will be included in the price bid for culvert pipe.

IOWADOT

STANDARD ROAD PLAN

REVISION 1 04-19-16

DR-104

SHEET 1 of 3

REVISIONS: Added general note regarding maximum cover on concrete arch pipes.

Brian Smith
APPROVED BY DESIGN METHODS ENGINEER

**DEPTH OF COVER TABLES FOR CONCRETE AND CORRUGATED PIPE**

CONSULTANT:

IOWA DEPARTMENT OF NATURAL RESOURCES
ENGINEERING SERVICES - WALLACE BUILDING
502 E. 9TH ST., DES MOINES, IA 50319-0034

TYPICAL CROSS SECTIONS AND DETAILS

ROAD MAINTENANCE FOR:
BENNINGTON RAMP/RIDGE BRIDGE
MARION COUNTY

| NO | BY / DATE | REVISION |
|---|---|---|

DRAWN BY: BLF
PROJECT NUMBER: 20-05-63-01
CHK'D BY:
DATE: OCT 2020
SHEET No: B.06

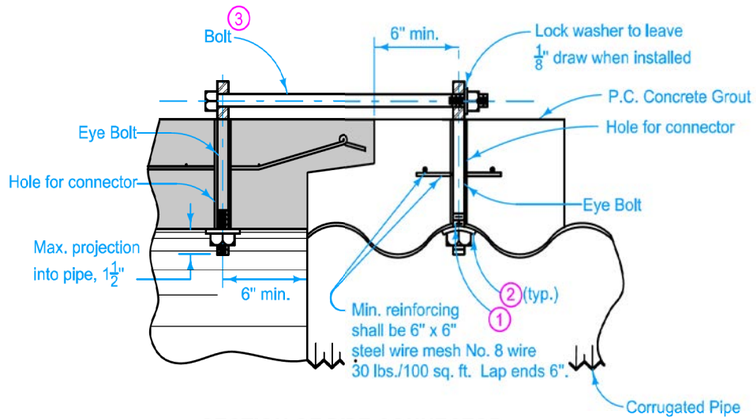


**SECTION OF PIPE CONNECTOR**
**(Concrete Pipe to Corrugated Pipe)**

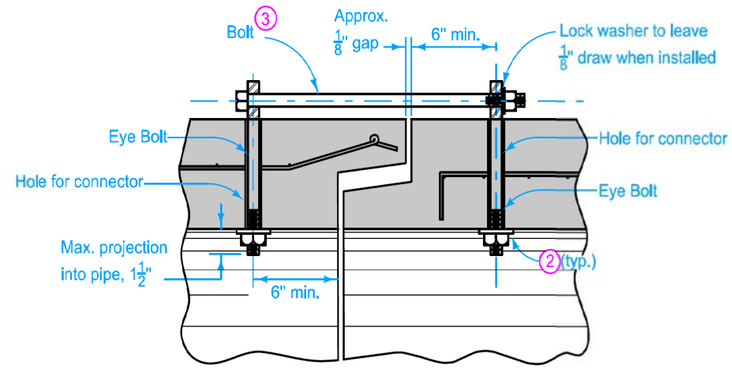


**SECTION OF PIPE CONNECTOR**
**(Concrete Pipe to Concrete Pipe)**

Wrap all joints on concrete roadway pipe culverts.

Use Type 3 Connections on all culvert pipes, unless specified otherwise. Refer to Materials I.M. 445.01 for Connector requirements.

Minimum 2 threads showing at all threaded ends.

Connections not required on pipe sections installed by trenchless methods.

For belled concrete pipe joints, connectors may be installed on the inside of the pipe.

TYPE 1

One connector at the top of the pipe section.

TYPE 2 (Sealed Joint)

Two connectors near the top of the pipe section. For details of reinforcement, refer to AASHTO M 170 for the class of pipe required. Refer to Materials I.M. 491.09 for seal requirements.

TYPE 3 (Non - Sealed Joint)

Two connectors near the top of the pipe section. For details of reinforcement, refer to AASHTO M 170 for the class of pipe required.

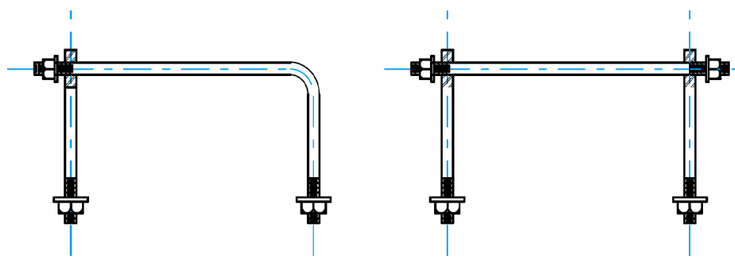

**ONE BEND END** **THREADED AT BOTH ENDS**

**OPTIONAL BOLTS/CONNECTORS**

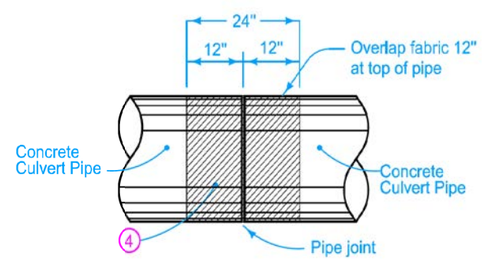


**PIPE JOINT WRAPPING**

| PIPE SIZE (in) | CONNECTOR AND BOLT SIZE (in.) | HOLE FOR CONNECTOR (in.) |
|---|---|---|
| 12 to 27 | $\frac{5}{8}$ | $\frac{7}{8}$ |
| 30 to 60 | $\frac{3}{4}$ | 1.0 |
| 66 to 132 | 1.0 | $1\frac{1}{4}$ |

1. If holes are field drilled, place a ribbon of butyl sealant around bolts before placing 3 in. x 3 in. x $\frac{1}{4}$ in. plate on bolts through corrugated metal pipe and tightening nuts.
2. $1\frac{3}{4}$ inch round x $\frac{9}{64}$ inch thick washer or 3 in. x 3 in. x $\frac{1}{4}$ in. square plate (shaped to pipe radius).
3. Connectors with One Bend End and Bell End spacers allowed per Materials I.M. 451. Refer to Optional Bolts detail.
4. Engineering fabric for embankment erosion control.

Possible Tabulations:
104-3
104-5B

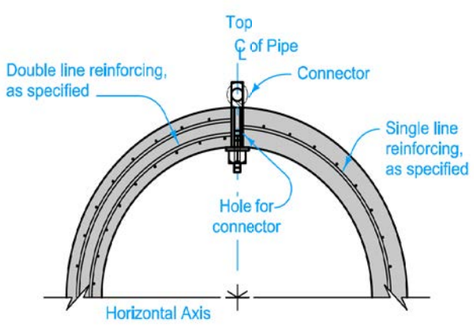


**TYPICAL SECTION**
**(Non-Sealed Joint)**

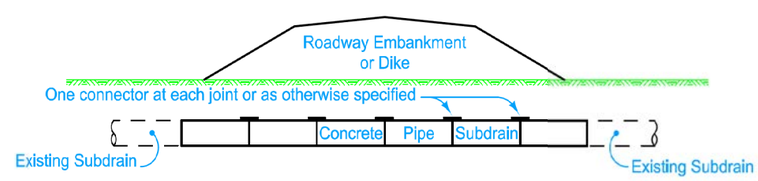


**TYPICAL INSTALLATION**

TYPE 1 CONNECTION

IOWADOT

**STANDARD ROAD PLAN**

REVISION 3 10-17-17

**DR-121**

SHEET 1 of 2

REVISIONS: Added 104-5B to Possible Tabulations. Added Type 3 connection to storm sewer outlet.

Brian Smith
APPROVED BY DESIGN METHODS ENGINEER

**CONNECTED PIPE JOINTS**

CONSULTANT:

IOWA DEPARTMENT OF NATURAL RESOURCES
ENGINEERING SERVICES - WALLACE BUILDING
502 E. 9TH ST., DES MOINES, IA 50319-0034

TYPICAL CROSS SECTIONS AND DETAILS

ROAD MAINTENANCE FOR:
BENNINGTON RAMP/RIDGE BRIDGE
MARION COUNTY

| NO. | BY DATE | REVISION |
|---|---|---|

DRAWN BY: BLF
PROJECT NUMBER: 20-05-63-01
CHK'D BY:
DATE: OCT 2020
SHEET No: B.07

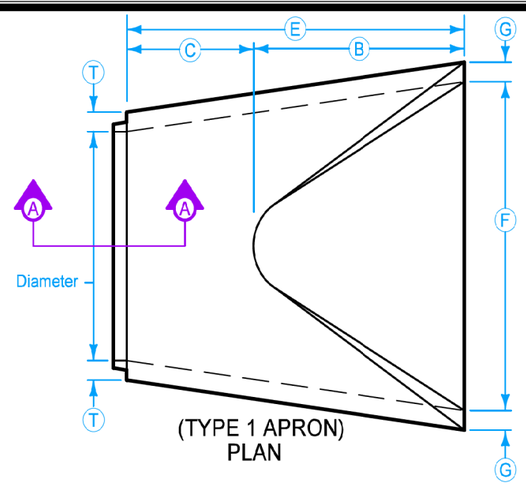


(TYPE 1 APRON)
PLAN

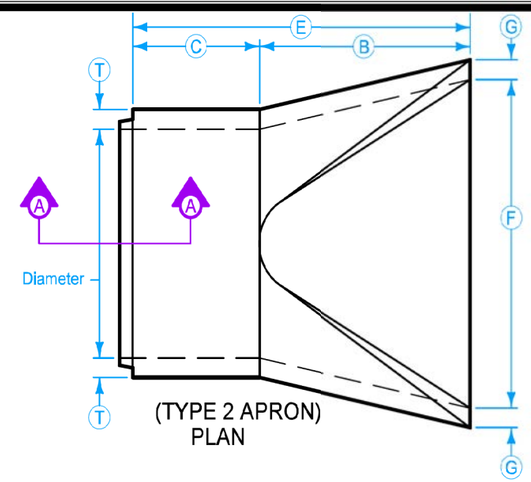


(TYPE 2 APRON)
PLAN

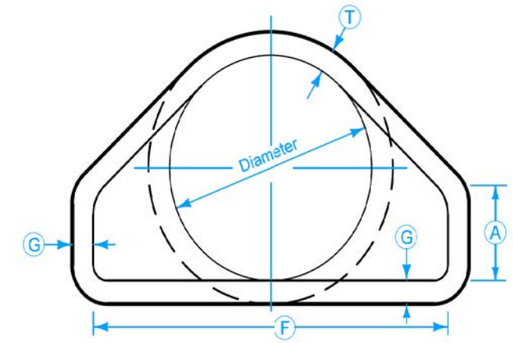


(TYPE 1 AND TYPE 2 APRONS)
END VIEW

Dimension 'E' shown is the minimum and is considered the design length. Adjust for any difference between the actual length of concrete apron installed and the length indicated hereon within the length of concrete culvert pipe furnished.

Install connected pipe joints as shown on DR-121.

When specified in the contract documents, install pipe apron guards as shown on DR-213. Pipe apron guards are incidental to "Concrete Aprons".

(1) Tongue end used on inlet end section. Groove end used on outlet end section.

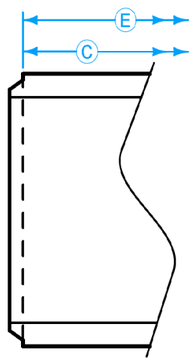


SECTION A-A
TONGUE END DETAIL (1)

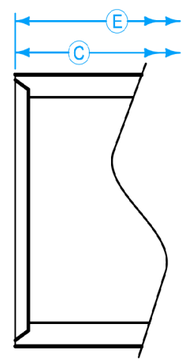


SECTION A-A
GROOVE END DETAIL (1)

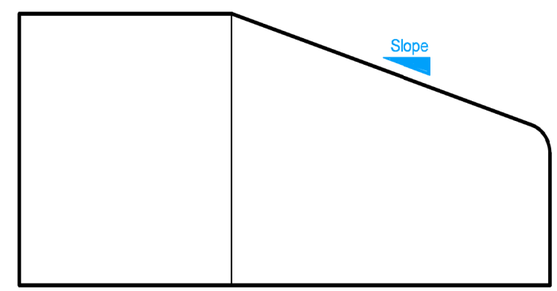


SIDE VIEW

| TYPE 1 APRONS | | | | | | | | |
|---|---|---|---|---|---|---|---|---|
| DIAM. | SLOPE | A | B | MINIMUM C | MINIMUM E | F | G | T |
| 12" | 2.4:1 | 4" | 2'-0" | 4'-7/8" | 6'-7/8" | 2'-0" | 2" | 2" |
| 15" | 2.4:1 | 6" | 2'-3" | 3'-10" | 6'-1" | 2'-6" | 2 1/4" | 2 1/4" |
| 18" | 2.3:1 | 9" | 2'-3" | 3'-10" | 6'-1" | 3'-0" | 2 1/2" | 2 1/2" |
| 21" | 2.4:1 | 9" | 3'-0 " | 3'-1 1/2" | 6'-1 1/2" | 3'-5" | 3" | 3" |
| 24" | 2.5:1 | 9 1/2" | 3'-7 1/2" | 2'-6" | 6'-1 1/2" | 4'-0" | 3" | 3" |
| 27" | 2.5:1 | 10 1/2" | 4'-1 " | 2'-0" | 6'-1 1/2" | 4'-4" | 3 1/2" | 3 1/2" |
| 30" | 2.5:1 | 12" | 4'-6" | 1'-7 3/4" | 6'-1 3/4" | 5'-0" | 3 1/2" | 3 1/2" |
| 36" | 2.5:1 | 15" | 5'-3" | 2'-9" | 8'-0" | 6'-0" | 4" | 4" |
| 42" | 2.5:1 | 21" | 5'-3" | 2'-9" | 8'-0" | 6'-6" | 4 1/2" | 4 1/2" |
| 48" | 2.5:1 | 24" | 6'-0" | 2'-0" | 8'-0" | 7'-0" | 5" | 5" |
| 54" | 1.8:1 | 27" | 5'-0" | 3'-0" | 8'-0" | 7'-6" | 5 1/2" | 5 1/2" |
| 60" | 1.6:1 | 29 1/2" | 5'-0" | 3'-0" | 8'-0" | 8'-0" | 5 1/2" | 6" |
| 66" | 1.7:1 | 30" | 6'-0" | 2'-3" | 8'-3" | 8'-0" | 5 1/2" | 6" |
| 72" | 1.6:1 | 30" | 6'-6" | 1'-9" | 8'-3" | 9'-0" | 6" | 7" |
| 78" | 1.8:1 | 36" | 7'-6" | 1'-9" | 9'-3" | 9'-6" | 6 1/2" | 7 1/2" |
| 84" | 1.3:1 | 29 1/2" | 6'-9" | 2'-6 1/2" | 9'-3 1/2" | 10'-0" | 6 1/2" | 8" |

| TYPE 2 APRONS | | | | | | | | |
|---|---|---|---|---|---|---|---|---|
| DIAM. | SLOPE | A | B | MINIMUM C | MINIMUM E | F | G | T |
| 12" | 2.4:1 | 4" | 2'-0" | 4'-7/8" | 6'-7/8" | 2'-0" | 2" | 2" |
| 15" | 2.4:1 | 6" | 2'-3" | 3'-10" | 6'-1" | 2'-6" | 2 1/4" | 2 1/4" |
| 18" | 2.3:1 | 9" | 2'-3" | 3'-10" | 6'-1" | 3'-0" | 2 1/2" | 2 1/2" |
| 21" | 2.4:1 | 9" | 3'-0" | 3'-1 1/2" | 6'-1 1/2" | 3'-5" | 3" | 3" |
| 24" | 2.5:1 | 9 1/2" | 3'-7 1/2" | 2'-6" | 6'-1 1/2" | 4'-0" | 3" | 3" |
| 27" | 2.5:1 | 10 1/2" | 4'-1 " | 2'-0" | 6'-1 1/2" | 4'-4" | 3 1/2" | 3 1/2" |
| 30" | 2.5:1 | 12" | 4'-6" | 1'-7 3/4" | 6'-1 3/4" | 5'-0" | 3 1/2" | 3 1/2" |
| 36" | 2.5:1 | 15" | 5'-3" | 2'-9" | 8'-0" | 6'-0" | 4" | 4" |
| 42" | 2.5:1 | 21" | 5'-3" | 2'-9" | 8'-0" | 6'-6" | 4 1/2" | 4 1/2" |
| 48" | 2.5:1 | 24" | 6'-0" | 2'-0" | 8'-0" | 7'-0" | 5" | 5" |
| 54" | 1.9:1 | 24 1/2" | 5'-5" | 2'-7" | 8'-0" | 7'-6" | 5 1/2" | 5 1/2" |
| 60" | 1.4:1 | 24 1/2" | 5'-0" | 3'-0" | 8'-0" | 8'-0" | 5 1/2" | 6" |
| 66" | 1.7:1 | 30" | 6'-0" | 2'-3" | 8'-3" | 8'-0" | 5 1/2" | 6" |
| 72" | 1.4:1 | 24" | 6'-6" | 1'-9" | 8'-3" | 9'-0" | 6" | 7" |
| 78" | 1.8:1 | 36" | 7'-6" | 1'-9" | 9'-3" | 9'-6" | 6 1/2" | 7 1/2" |
| 84" | 1.5:1 | 23 1/2" | 7'-6 1/2" | 1'-9" | 9'-3 1/2" | 10'-0" | 6 1/2" | 8" |

Contract Item:
Apron, Concrete

Tabulations:
104-3
104-5C

IOWADOT

STANDARD ROAD PLAN

REVISION 2 4-21-20

DR-201

SHEET 1 of 1

REVISIONS: Added Designer Info button.

APPROVED BY DESIGN METHODS ENGINEER

CONCRETE APRONS

CONSULTANT:

IOWA DEPARTMENT OF NATURAL RESOURCES

ENGINEERING SERVICES - WALLACE BUILDING
502 E. 9TH ST., DES MOINES, IA 50319-0034

TYPICAL CROSS SECTIONS AND DETAILS

ROAD MAINTENANCE FOR:
BENNINGTON RAMP/RIDGE BRIDGE
MARION COUNTY

| NO. | BY / DATE | REVISION |
|---|---|---|

DRAWN BY: BLF
PROJECT NUMBER: 20-05-63-01
CHK'D BY:
DATE: OCT 2020
SHEET No: B.08

## RCP AND VCP CIRCULAR PIPE BEDDING (1)

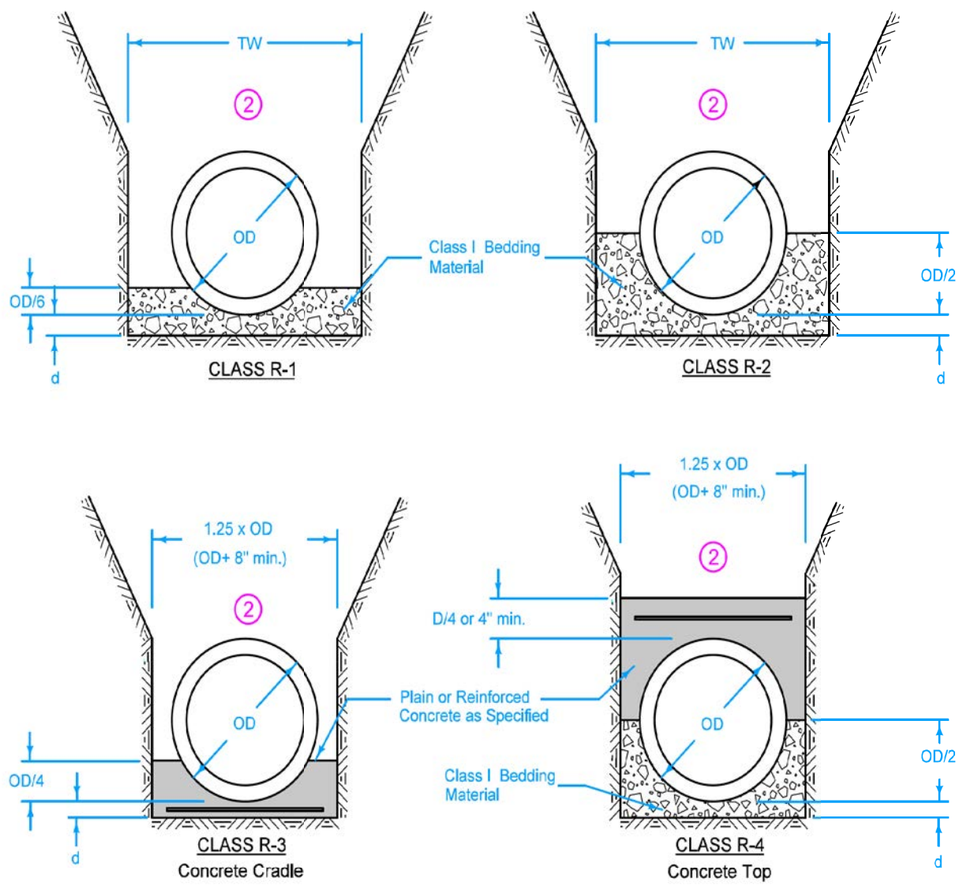


## REINFORCED CONCRETE ARCH AND ELLIPTICAL PIPE BEDDING

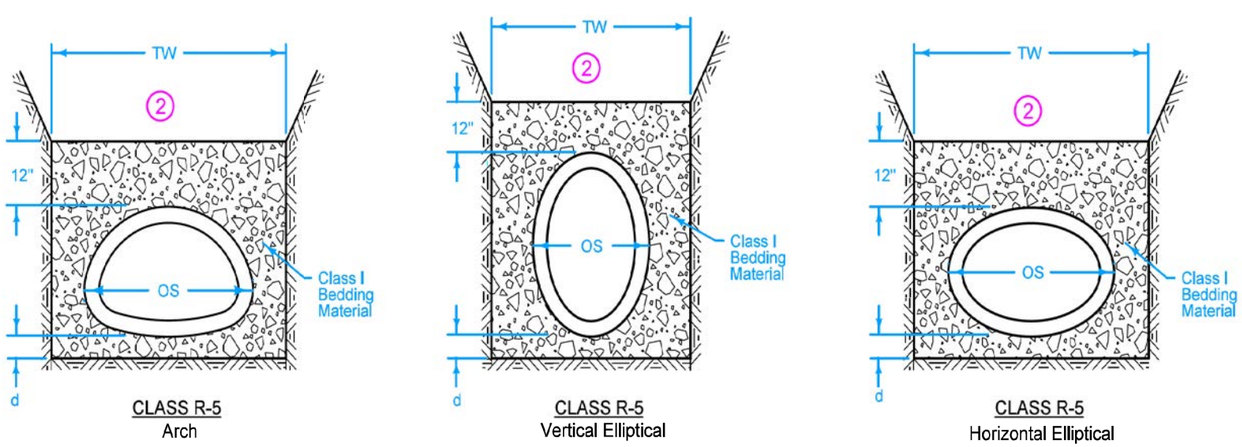


Refer to sheet 2 for bury depth restrictions.

(1) Use Bedding Class R-1 or R-2 unless specified otherwise.

(2) Place remainder of bedding and backfill materials as specified in the contract documents.

Key

| | | |
|---|---|---|
| OD | = | Outside diameter of pipe |
| OS | = | Outside span of pipe |
| TW | = | Trench width at top of pipe:<br>Min. = OD+18 inches<br>Max.= 1.25xOD+12 inches OR<br>54 inches (whichever is greater) |
| d | = | Depth of bedding material below pipe:<br>OD/8 or OS/8, OR 4 inches<br>(whichever is greater) |

FIGURE 3010.102 | SHEET 1 OF 2

SUDAS | IOWA DOT | REVISION 3 04-16-19

FIGURE 3010.102 | STANDARD ROAD PLAN | SW-102 | SHEET 1 of 2

REVISIONS: Changed Class 1 to Class I in CLASS R-5 Vertical Elliptical detail.

Paul D. Wigand — SUDAS DIRECTOR | DESIGN METHODS ENGINEER

**RIGID GRAVITY PIPE TRENCH BEDDING**

CONSULTANT:

IOWA DEPARTMENT OF NATURAL RESOURCES
ENGINEERING SERVICES - WALLACE BUILDING
502 E. 9TH ST., DES MOINES, IA 50319-0034

TYPICAL CROSS SECTIONS AND DETAILS

ROAD MAINTENANCE FOR: BENNINGTON RAMP/RIDGE BRIDGE — MARION COUNTY

| NO. | BY / DATE | REVISION |
|---|---|---|

DRAWN BY: BLF | PROJECT NUMBER: 20-05-63-01
CHK'D BY: | DATE: OCT 2020
SHEET No: B.09

## ESTIMATED PROJECT QUANTITIES

| ITEM NO. | ITEM | UNIT | TOTAL |
|---|---|---|---|
| | BENNINGTON RAMP ROAD | | |
| 1 | 2101 - CLEARING | LS | 1 |
| 2 | 2101 - REMOVAL OF FLOOD DEBRIS | STA | 13 |
| 3 | 2104 - EXCAVATION, CL 13, CHANNEL | CY | 50 |
| 4 | 2125 - RESHAPING/CLEANING DITCHES | STA | 15 |
| 5 | 2127 - RECONSTRUCTION OF ROADBED - BLADING/SHAPING | STA | 61.7 |
| 6 | 2312 - GRANULAR SURFACING ON ROAD, 3-INCH MINUS, CRUSHED STONE | TON | 2160 |
| 7 | 2417 - APRON, CONC, 18" | EACH | 1 |
| 8 | 2417 - APRON, CONC, 24" | EACH | 2 |
| 9 | 2417 - APRON, CONC, 30" | EACH | 2 |
| 10 | 2417 - APRON, CONC, 36" | EACH | 1 |
| 11 | 2417 - CULV, CONC RDWY PIPE, 18" | LF | 40 |
| 12 | 2417 - CULV, CONC RDWY PIPE, 24" | LF | 80 |
| 13 | 2417 - CULV, CONC RDWY PIPE, 30" | LF | 80 |
| 14 | 2417 - CULV, CONC RDWY PIPE, 36" | LF | 60 |
| 15 | 2507 - REVETMENT, CLASS E | TON | 30 |
| 16 | 2507 - EROSION STONE | TON | 45 |
| 17 | 2518 - SAFETY CLOSURE | EACH | 2 |
| 18 | 2528 - TRAFFIC CONTROL | LS | 1 |
| 19 | 2533 - MOBILIZATION | LS | 1 |
| | | | |
| | RIDGE BRIDGE ROAD | | |
| 20 | 2101 - CLEARING | LS | 1 |
| 21 | 2312 - GRANULAR SURFACING ON ROAD, CRUSHED STONE - 1.5-INCH | TON | 48 |
| 22 | 2417 - APRON, CONC, 30" | EACH | 3 |
| 23 | 2417 - CULV, CONC RDWY PIPE, 30" | LF | 120 |
| 24 | 2507 - ENGINEERING FABRIC | SY | 312 |
| 25 | 2507 - REVETMENT, CLASS E | TON | 100 |
| 26 | 2507 - EROSION STONE | TON | 40 |
| 27 | 2518 - SAFETY CLOSURE | EACH | 1 |
| | | | |

## ESTIMATE REFERENCE INFORMATION

| ITEM NO. | DESCRIPTION |
|---|---|
| 1 | A. For general access to culverts. |
| 2 | A. Move debris to south side of road. |
| 3 | A. Clean 50 LF of outlet end of 36" culvert.<br>B. Waste spoil on south side of road. |
| 4 | A. Reshape ditches as shown in typical cross section.<br>B. Waste spoil on south side of road. |
| 5 | A. Repair all potholes by scarifying surrounding area to depth of pothole and recompacting.<br>B. Re-establish roadway crown - 4% positive drainage each way from centerline; 4% across the width in banked sections.<br>C. Remove any high shoulder areas, before spreading new rock. |
| 6 | A. A final leveling of the aggregate after being dumped, is required.<br>B. From DOT approved source.<br>C. Approximate 5-inch depth |
| 7-10 | A. For inlets.<br>B. From DOT approved source. |
| 11-13 | A. Use type 3 connections.<br>B. Remove existing culverts and dispose of off project site.<br>C. From DOT approved source. |
| 15 | A. 10 ton at 30 and 36-inch culvert inlet. |
| 16 | A. 5 ton at 18 and 24-inch culvert inlet.<br>B. 10 ton at 30 and 36-inch culvert inlet. |
| 17 | A. Follow current Iowa DOT Standard Specifications section 2518 for closure requirements. |

## ESTIMATE REFERENCE INFORMATION

| ITEM NO. | DESCRIPTION |
|---|---|
| 20 | A. For general access to culverts. |
| 21 | A. Rock for road after culvert replacement |
| 21 | A. For inlets.<br>B. From DOT approved source. |
| 23 | A. Use type 3 connections.<br>B. Remove existing culverts and dispose of off project site.<br>C. From DOT approved source.Reshape ditches as shown in typical cross section. |
| 24 | A. 20' X 20' at new culvert inlets/outlets.<br>B. 40' X 40' at existing box culvert. |
| 25 | A. 20 ton at outlet of new culverts.<br>B. 40 ton at inlet/outlet of existing box culvert. |
| 26 | A. 10 ton at all inlets. |
| 27 | A. Follow current Iowa DOT Standard Specifications section 2518 for closure requirements. |

CONSULTANT:


IOWA DEPARTMENT OF NATURAL RESOURCES

ENGINEERING SERVICES - WALLACE BUILDING
502 E. 9TH ST., DES MOINES, IA 50319-0034


QUANTITIES AND GENERAL INFORMATION

ROAD MAINTENANCE FOR:

BENNINGTON RAMP/RIDGE BRIDGE

MARION COUNTY

| NO. | BY / DATE | REVISION |
|---|---|---|
| | | |

DRAWN BY: BLF

PROJECT NUMBER: 20-05-63-01

CHK'D BY:

DATE: OCT 2020

SHEET No: C.01

## GENERAL NOTES

Verify actual locations and elevations with DNR Engineer.

All work shall conform to and be performed in accordance with all applicable codes and ordinances.

The contractor shall visit the site and inspect the project area and thoroughly familiarize themselves with the actual job conditions prior to bidding and the start of work. Failure to visit the project site shall not relieve the contractor from performing the work in accordance to the plans, specification, special provisions and contract.

The contractor shall verify, at the site, all dimensions and conditions shown on the plans and shall notify the DNR Engineer of any discrepancies, omissions, and/or conflicts prior to proceeding with the work.

It shall be the contractor's responsibility to provide waste areas or disposal sites for excess material (excavated material or broken concrete) which is not desirable to be incorporated into the work involved on this project. No payment for overhaul will be allowed for material hauled to these sites. No material shall be placed within the right-of-way, unless specifically stated in the plans or approved by the DNR Engineer.

The contractor shall not disturb desirable grass areas and desirable trees outside the construction limits. The contractor will not be permitted to park or service vehicles and equipment or use these areas for storage of materials. Storage, parking and service areas will be subject to the approval of the DNR Engineer.

Where utilities and fixtures are shown as Existing on the plans or encountered within the construction area, it shall be the responsibility of the contractor to notify the DNR Engineer of those utilities prior to the beginning of any construction. The contractor shall be afforded access to these facilities for necessary modification of services. Underground facilities, structures and utilities have been plotted from available surveys and records and therefore their locations must be considered approximate only. It is possible there may be others, the existence of which is presently not known or shown. It is the contractor's responsibility to determine their existence and exact location and to avoid damage thereto. No claims for additional compensation will be allowed to the contractor for any interference or delay caused by such work.

The contractor shall shape graded area to maintain surface drainage. All elevations are to finish grade.

The contractor is expected to have materials, equipment, and labor available on a daily basis to install and maintain erosion control features on the project. This may involve seeding, silt fence, rock ditch checks, silt basins or silt dikes.

CONSULTANT:

IOWA DEPARTMENT OF NATURAL RESOURCES
ENGINEERING SERVICES - WALLACE BUILDING
502 E. 9TH ST., DES MOINES, IA 50319-0034

QUANTITIES AND GENERAL INFORMATION

ROAD MAINTENANCE FOR:
BENNINGTON RAMP/RIDGE BRIDGE
MARION COUNTY

| NO. | BY / DATE | REVISION |
|---|---|---|

| | |
|---|---|
| DRAWN BY: BLF | PROJECT NUMBER: 20-05-63-01 |
| CHK'D BY: | DATE: OCT 2020 |

SHEET No: C.02

CONSULTANT:

**IOWA DEPARTMENT OF NATURAL RESOURCES**

ENGINEERING SERVICES - WALLACE BUILDING
502 E. 9TH ST., DES MOINES, IA 50319-0034

SITE PLAN

ROAD MAINTENANCE FOR:

BENNINGTON RAMP/RIDGE BRIDGE

MARION COUNTY

| NO. | BY / DATE | REVISION |
|---|---|---|

| | |
|---|---|
| DRAWN BY: BLF | PROJECT NUMBER: 20-05-63-01 |
| CHK'D BY: | DATE: OCT 2020 |
| SHEET No: D.01 | |

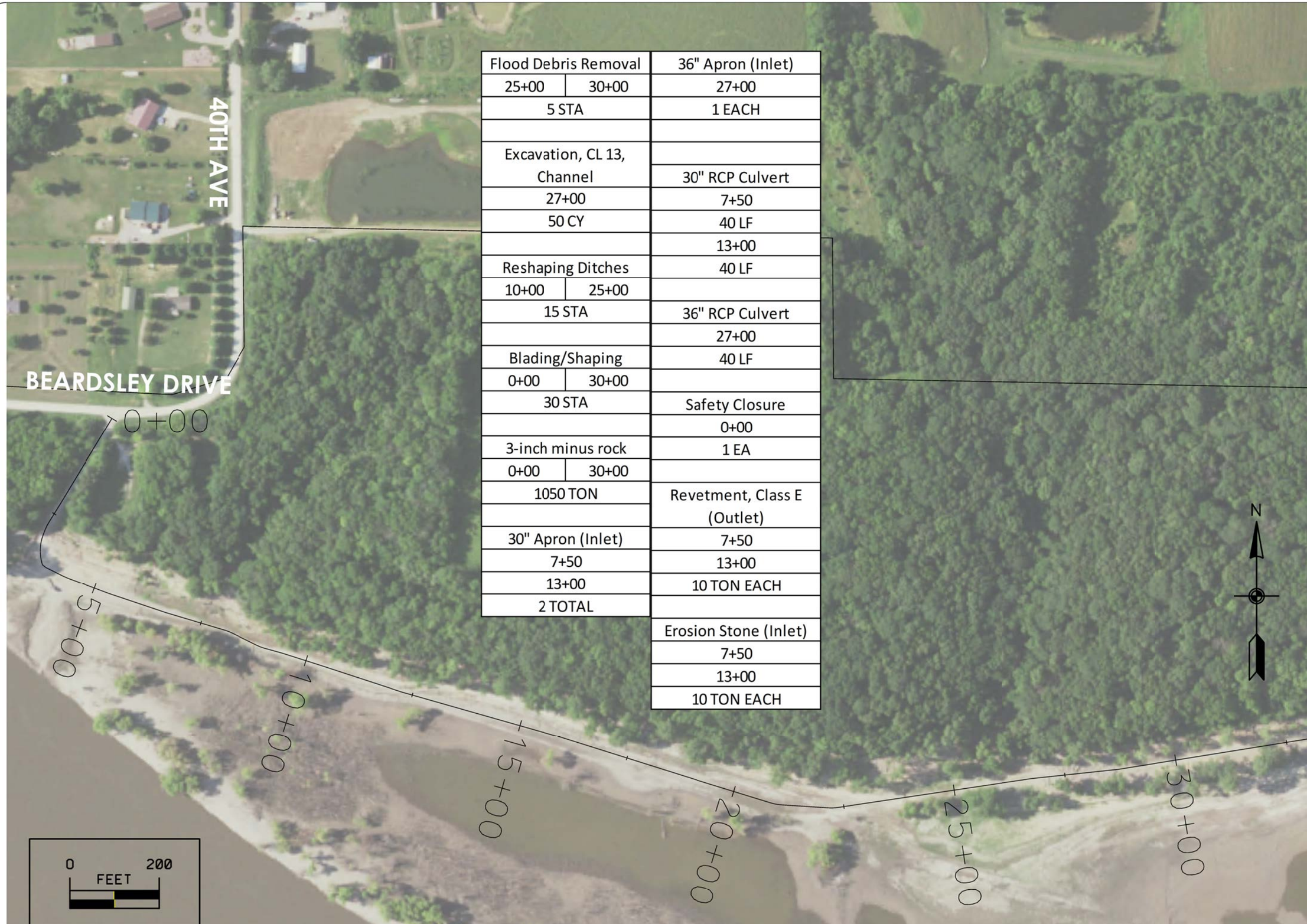


| Flood Debris Removal | |
|---|---|
| 25+00 | 30+00 |
| 5 STA | |
| | |
| Excavation, CL 13, Channel | |
| 27+00 | |
| 50 CY | |
| | |
| Reshaping Ditches | |
| 10+00 | 25+00 |
| 15 STA | |
| | |
| Blading/Shaping | |
| 0+00 | 30+00 |
| 30 STA | |
| | |
| 3-inch minus rock | |
| 0+00 | 30+00 |
| 1050 TON | |
| | |
| 30" Apron (Inlet) | |
| 7+50 | |
| 13+00 | |
| 2 TOTAL | |

| 36" Apron (Inlet) |
|---|
| 27+00 |
| 1 EACH |
| |
| |
| 30" RCP Culvert |
| 7+50 |
| 40 LF |
| 13+00 |
| 40 LF |
| |
| 36" RCP Culvert |
| 27+00 |
| 40 LF |
| |
| Safety Closure |
| 0+00 |
| 1 EA |
| |
| Revetment, Class E (Outlet) |
| 7+50 |
| 13+00 |
| 10 TON EACH |
| |
| Erosion Stone (Inlet) |
| 7+50 |
| 13+00 |
| 10 TON EACH |

CONSULTANT:

IOWA DEPARTMENT OF NATURAL RESOURCES

ENGINEERING SERVICES - WALLACE BUILING
502 E. 9TH ST., DES MOINES, IA 50319-0034

SITE PLAN

ROAD MAINTENANCE FOR:

BENNINGTON RAMP/RIDGE BRIDGE

MARION COUNTY

| NO. | BY DATE | REVISION |
|---|---|---|

DRAWN BY: BLF
PROJECT NUMBER: 20-05-63-01
CHK'D BY:
DATE: OCT 2020
SHEET No: D.02

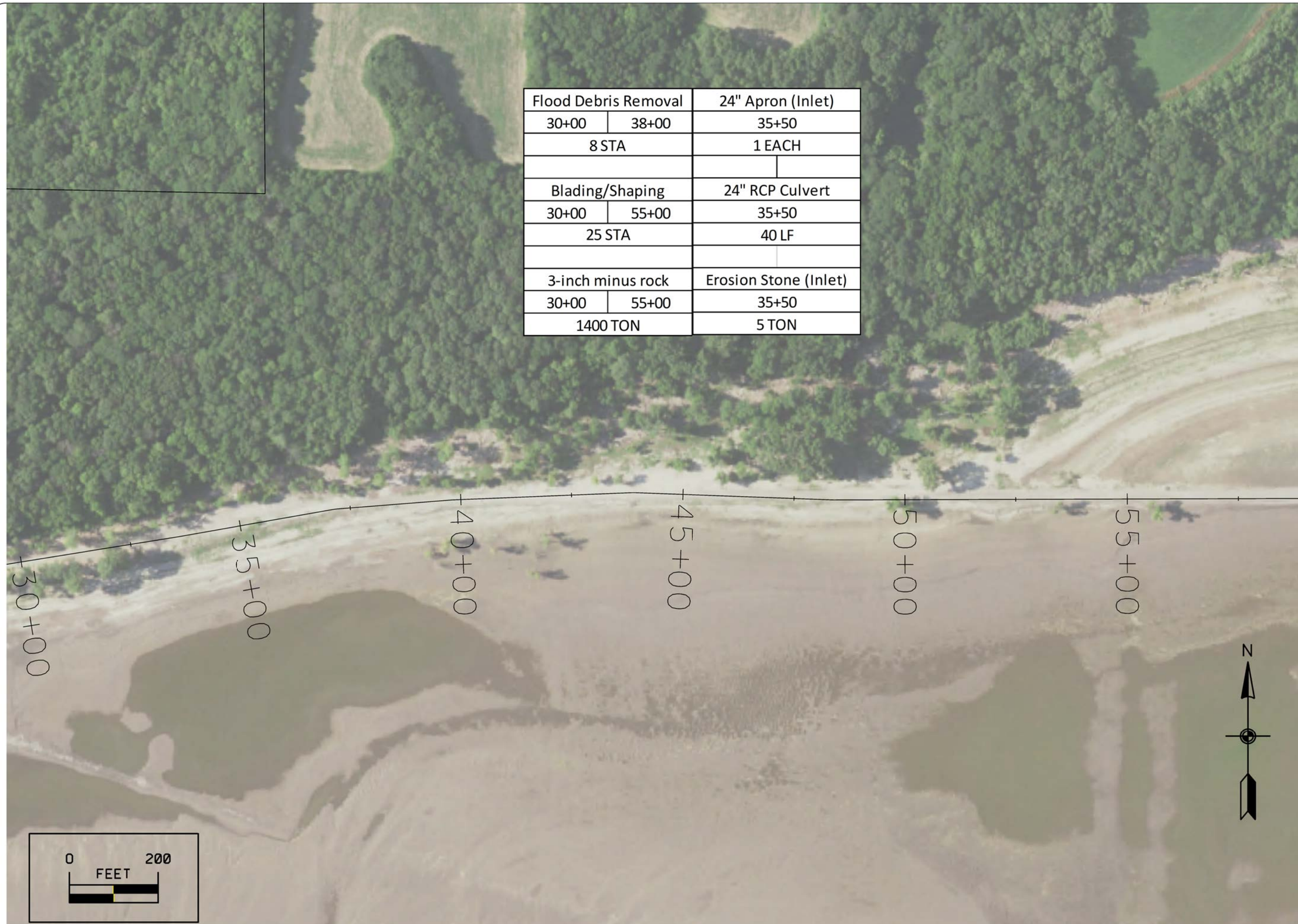


| Flood Debris Removal | | 24" Apron (Inlet) |
|---|---|---|
| 30+00 | 38+00 | 35+50 |
| 8 STA | | 1 EACH |
| | | |
| Blading/Shaping | | 24" RCP Culvert |
| 30+00 | 55+00 | 35+50 |
| 25 STA | | 40 LF |
| | | |
| 3-inch minus rock | | Erosion Stone (Inlet) |
| 30+00 | 55+00 | 35+50 |
| 1400 TON | | 5 TON |

CONSULTANT:

**IOWA DEPARTMENT OF NATURAL RESOURCES**

ENGINEERING SERVICES - WALLACE BUILING
502 E. 9TH ST., DES MOINES, IA 50319-0034

SITE PLAN

ROAD MAINTENANCE FOR:

BENNINGTON RAMP/RIDGE BRIDGE

MARION COUNTY

| NO. | BY / DATE | REVISION |
|---|---|---|

| | |
|---|---|
| DRAWN BY: BLF | PROJECT NUMBER: 20-05-63-01 |
| CHK'D BY: | DATE: OCT 2020 |

SHEET No: **D.03**

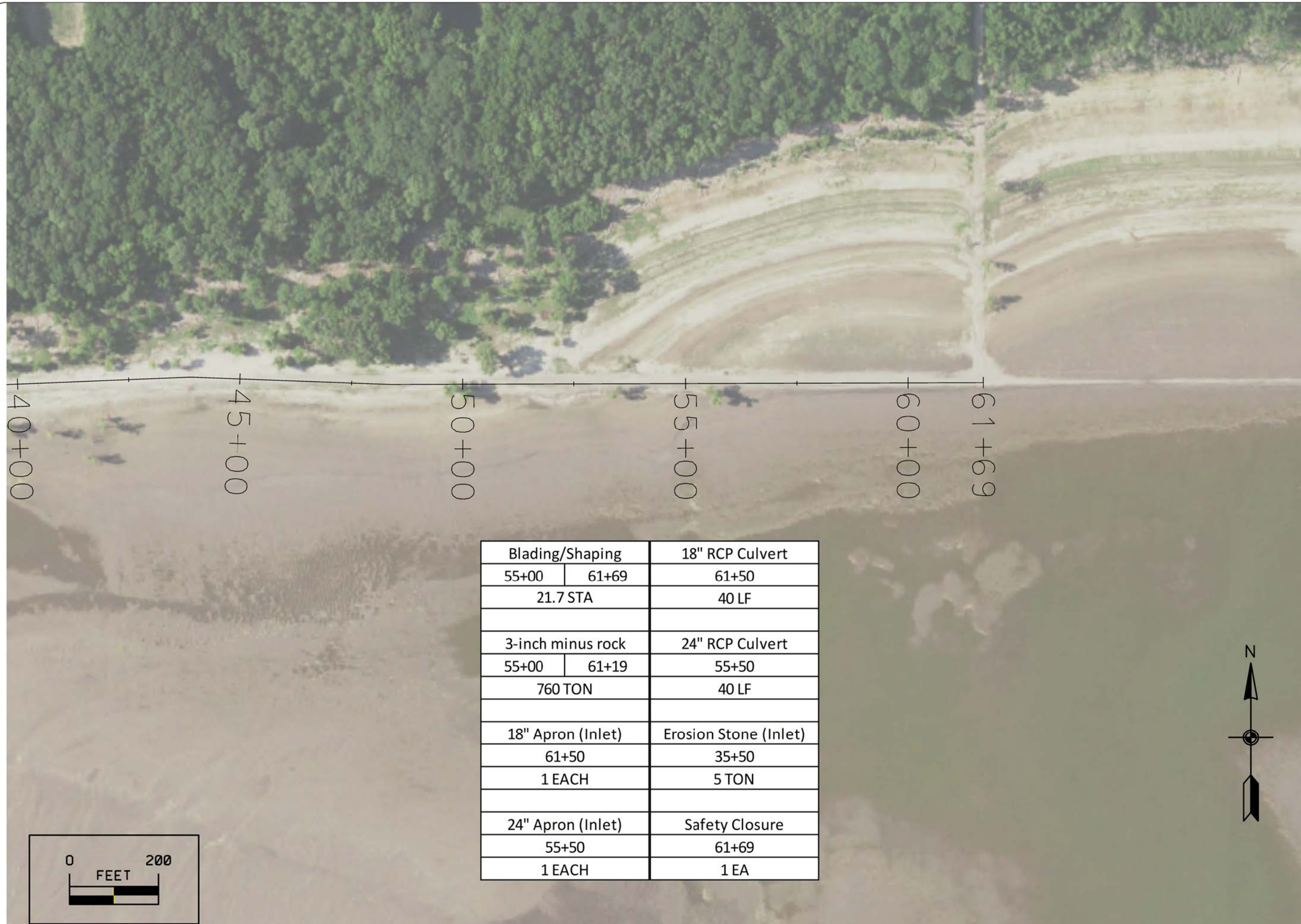


| Blading/Shaping | | 18" RCP Culvert |
|---|---|---|
| 55+00 | 61+69 | 61+50 |
| 21.7 STA | | 40 LF |
| | | |
| 3-inch minus rock | | 24" RCP Culvert |
| 55+00 | 61+19 | 55+50 |
| 760 TON | | 40 LF |
| | | |
| 18" Apron (Inlet) | | Erosion Stone (Inlet) |
| 61+50 | | 35+50 |
| 1 EACH | | 5 TON |
| | | |
| 24" Apron (Inlet) | | Safety Closure |
| 55+50 | | 61+69 |
| 1 EACH | | 1 EA |

CONSULTANT:

**IOWA DEPARTMENT OF NATURAL RESOURCES**

ENGINEERING SERVICES - WALLACE BUILING
502 E. 9TH ST., DES MOINES, IA 50319-0034

SITE PLAN

ROAD MAINTENANCE FOR:

BENNINGTON RAMP/RIDGE BRIDGE

MARION COUNTY

| NO. | BY DATE | REVISION |
|---|---|---|

DRAWN BY: BLF
PROJECT NUMBER: 20-05-63-01
CHK'D BY:
DATE: OCT 2020
SHEET No: D.04

CONSULTANT:

**IOWA DEPARTMENT OF NATURAL RESOURCES**

ENGINEERING SERVICES - WALLACE BUILING
502 E. 9TH ST., DES MOINES, IA 50319-0034

# SITE PLAN

ROAD MAINTENANCE FOR:

## BENNINGTON RAMP/RIDGE BRIDGE

MARION COUNTY

| NO | BY / DATE | REVISION |
|---|---|---|

| | |
|---|---|
| DRAWN BY: BLF | PROJECT NUMBER: 20-05-63-01 |
| CHK'D BY: | DATE: OCT 2020 |

SHEET No: **D.05**

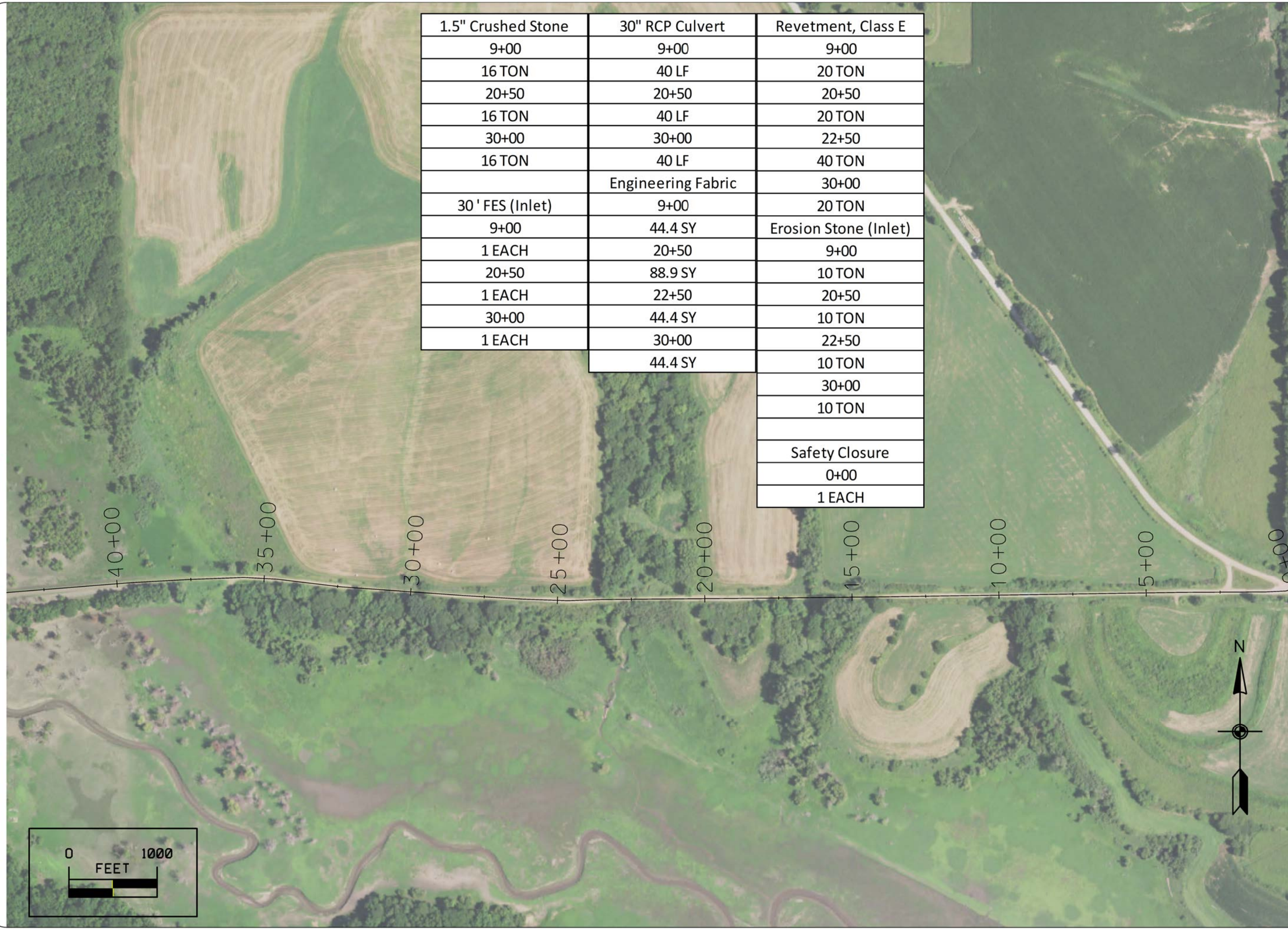


| 1.5" Crushed Stone | 30" RCP Culvert | Revetment, Class E |
|---|---|---|
| 9+00 | 9+00 | 9+00 |
| 16 TON | 40 LF | 20 TON |
| 20+50 | 20+50 | 20+50 |
| 16 TON | 40 LF | 20 TON |
| 30+00 | 30+00 | 22+50 |
| 16 TON | 40 LF | 40 TON |
| | Engineering Fabric | 30+00 |
| 30 ' FES (Inlet) | 9+00 | 20 TON |
| 9+00 | 44.4 SY | Erosion Stone (Inlet) |
| 1 EACH | 20+50 | 9+00 |
| 20+50 | 88.9 SY | 10 TON |
| 1 EACH | 22+50 | 20+50 |
| 30+00 | 44.4 SY | 10 TON |
| 1 EACH | 30+00 | 22+50 |
| | 44.4 SY | 10 TON |
| | | 30+00 |
| | | 10 TON |
| | | |
| | | Safety Closure |
| | | 0+00 |
| | | 1 EACH |

CONSULTANT:

**IOWA DEPARTMENT OF NATURAL RESOURCES**

ENGINEERING SERVICES - WALLACE BUILING
502 E. 9TH ST., DES MOINES, IA 50319-0034

SITE PLAN

ROAD MAINTENANCE FOR:

BENNINGTON RAMP/RIDGE BRIDGE

MARION COUNTY

| NO. | BY DATE | REVISION |
|---|---|---|

| | |
|---|---|
| DRAWN BY: BLF | PROJECT NUMBER: 20-05-63-01 |
| CHK'D BY: | DATE: OCT 2020 |

SHEET No:

**D.06**